WEP Warwick Evans Publishing

Transactions on Computer Science and Intelligent Systems Research
ISSN: 2960-1800, eISSN: 2960-2238 | Volume 14
TPCEE 2026

Study on Penetration Characteristics of Carbon Fiber-Aluminum Composite Hydrogen Storage Tank Subjected to Shaped Charge Jet

Xinru Su, Xuchao Pan *, Lin Zhou, Wei Du, Hongyin Gao, Siwei Wang, Yu Hao and Haoran Sun

Nanjing University of Science and Technology, Nanjing, China

* Corresponding Author Email: pxchxc@njust.edu.cn

Abstract. To investigate the response characteristics of carbon fiber wound aluminum-lined high-pressure hydrogen storage tanks under shaped charge jet impact, full-scale penetration tests on real tanks were conducted, and a numerical model of penetration process was established based on finite element dynamic simulation software. The influences of carbon fiber layers on jet velocity and penetration performance of aluminum alloy tank bodies were analyzed quantitatively. The results indicate that shaped jets formed by TNT charges with φ35 and φ56 copper liners are capable of fully penetrating the tank, with perforation diameters ranging from 10 mm to 50 mm. The outer carbon fiber composite layer is dominated by brittle failure, while the inner aluminum liner features thin wall and low energy absorption capacity; both layers impose limited blocking effects on high-speed shaped jets. After passing through the carbon fiber layer, the jet velocity drops by 500 m/s to 1300 m/s. Under the combined action of jet velocity reduction and composite target effect, the size of openings formed by metal jets on the aluminum alloy liner increases remarkably.

Keywords: Hydrogen storage tank; Carbon fiber composite; Shaped charge jet; Penetration; Thin-walled composite structure.

1. Introduction

Hydrogen energy is a new clean energy source with great development potential, possessing critical strategic value in energy security and national defense storage & transportation fields. As the core carrier for hydrogen storage and transportation, carbon fiber-wrapped aluminum-lined high-pressure hydrogen storage tanks have become key equipment in large-scale hydrogen energy application and relevant storage-transportation safety guarantee systems. Therefore, the dynamic mechanical response characteristics of hydrogen storage tanks under various impact loads and ammunition damage loads have gradually become a core research direction in the field of safety protection.

High-speed metal jets formed by detonation of shaped charges are typical strong damage loads with powerful directional penetration capability, which serve as representative damage elements to evaluate the extreme anti-damage performance of tank vessels. Research on damage evolution laws of composite hydrogen storage tanks penetrated by shaped charge jets is urgently required to improve the protective design of hydrogen storage equipment and enhance safety redundancy during storage and transportation.

Since the steady-state fluid theory of shaped jet formation proposed by Birkhoff, the complete calculation system of jet velocity, mass distribution and fracture duration has been formed after improvement by the Pugh-Eichelberger-Rostoker (PER) unsteady correction theory. Most existing numerical simulations take homogeneous thick metal targets and unconstrained free-flying jets as research objects, which have obvious structural differences from commercial carbon fiber-aluminum composite hydrogen storage tanks. Homogeneous thick metal targets continuously dissipate jet kinetic energy through plastic deformation, while composite tanks adopt a multi-layer heterogeneous thin-wall structure consisting of brittle fiber outer layers and thin aluminum liners, leading to completely distinct energy dissipation and penetration failure mechanisms between the two types of

Content from this work may be used under the terms of CC BY-NC 4.0 licence (https://creativecommons.org/licenses/by-nc/4.0/).
Published by Warwick Evans Publishing.

targets. Full-scale real-tank experiments targeting hypervelocity directional damage elements such as shaped charge jets are scarce, and existing numerical simulations fail to fully couple the characteristics of brittle delamination of carbon fiber layers and low energy absorption of thin aluminum liners. The attenuation mechanism of thin-walled composite tanks blocking shaped charge jets has not been clarified, and core contradictions between damage morphologies observed in experiments and predictions from classical jet theories cannot be explained. Systematic quantitative studies on shaped charge jet penetration into composite hydrogen storage tanks remain significantly insufficient.

This paper takes typical carbon fiber-aluminum composite hydrogen storage tanks as research objects, and combines numerical simulation and experimental methods to study their mechanical responses under shaped charge jet impact, as well as the blocking and energy dissipation laws of composite tank structures against shaped jets, so as to provide support for protection and damage assessment of hydrogen storage equipment.

A commercial hydrogen storage tank with an inner diameter of 630 mm is selected as the research object in this work. Three groups of gradient-charge shaped charge jet penetration experiments on real tanks are designed to observe the hole morphology and delamination failure characteristics of inner and outer tank walls. Combined with classical shaped jet formation theories, a finite element dynamic simulation model is constructed. The internal mechanisms accounting for mismatches between experimental results, traditional theories and original simulation models are interpreted from material and structural perspectives. The blocking and energy dissipation laws of carbon fiber-aluminum composite tanks against shaped charge jets are quantitatively revealed, providing theoretical and experimental foundations for explosion-proof protection and anti-penetration structural optimization of high-pressure hydrogen storage tanks.

2. Experimental System and Scheme Design

2.1. Penetration Mechanism of Shaped Charge Jet

In 1948, Birkhoff proposed the steady-state fluid theory for shaped charge jet formation. Under detonation pressure of dozens of gigapascals, the liner is simplified as an incompressible ideal fluid, and governing equations for jet/slug motion velocity and mass distribution are derived. This theory can describe the initial convergence and formation of jets, but fails to explain continuous jet elongation and velocity gradient between jet head and tail. Based on the steady-state model, Pugh, Eichelberger and Rostoker put forward the PER unsteady jet theory, introducing Taylor projection angle to correct variable collapse velocities of liner micro-elements. This theory accurately describes jet flight stretching and critical fracture behavior, establishing calculation models for jet head/tail velocity, effective flight length and fracture time.

Verifications of traditional theories and relevant numerical simulations are mostly carried out on homogeneous thick metal targets. Thick metal targets continuously consume jet kinetic energy via plastic compression and shear deformation. The penetration capacity of jet head, middle section and tail can be distinguished through hole gradient, penetration depth and residual slug morphology of targets, fully reproducing evolution laws of jet segmentation and fracture. Free-field jet simulations without target constraints only simulate jet evolution in air, lacking target blocking effects, which are essentially different from real-tank experiments with tank targets as boundaries.

In this experiment, TNT charges are detonated to drive copper alloy liners to converge toward the axis and extrude at high speed, generating continuous metal jets with head velocity at the order of kilometers per second. Intense directional kinetic energy impacts composite hydrogen storage tanks and induces multi-stage material failures including perforation, delamination and crushing. The test specimen is a double-layer heterogeneous thin-wall composite structure: the outer carbon fiber layer lacks plastic buffering capacity and directly suffers fiber splitting and matrix crushing under hypervelocity impact without elastic deformation stage, resulting in extremely low energy dissipation

efficiency; the inner aluminum liner has limited wall thickness, with insufficient stroke for plastic deformation energy absorption. The overall blocking and energy consumption capacity of the tank against jets is extremely low, and its mechanical boundary approximates an unconstrained free target. Control experiments with gradient charge masses are set to compare the evolution characteristics of layered damage and hole sizes under different jet kinetic energies, so as to clarify essential differences in penetration response between thin-walled heterogeneous composite structures and traditional homogeneous thick metal targets.

2.2. Main Objectives of Experiments

The primary objective of experiments in this paper is to obtain macroscopic damage characteristics of composite hydrogen storage tanks under different charge masses, and quantitatively characterize the damage extension range of outer carbon fiber layers, outer perforation diameter, inner hole diameter of aluminum liners and interlayer delamination degree. On this basis, the blocking and energy dissipation characteristics of double-layer heterogeneous thin-wall tanks against high-speed shaped jets are clarified. Original multi-working-condition experimental data are collected simultaneously to provide reliable reference for boundary correction of shaped jet formation theories and parameter calibration of finite element simulation material models. Finally, the influence law of total charge energy on penetration damage degree of hydrogen storage tanks is analyzed, offering direct experimental support for explosion-proof and anti-shaped-jet protection structural optimization of high-pressure hydrogen storage tanks.

2.3. Experimental System and Working Conditions

The hydrogen storage tank used in experiments adopts a double-layer composite structure with outer diameter of 690 mm and inner diameter of 630 mm. The aluminum alloy liner has a thickness of 7 mm, which can absorb energy via plastic deformation but suffers limited plastic stroke due to thin wall. The outer layer is woven carbon fiber, a typical brittle anisotropic material with low interlayer bonding strength. When subjected to hypervelocity impact loads, it skips the elastic buffering stage and immediately develops fiber splitting, delamination and crushing failures with very low energy dissipation efficiency.

The experimental layout is illustrated in Figure 1. An initiator matched with electric detonator is used to detonate shaped charges. TNT serves as explosive and copper alloy as liner. Variables include charge mass, charge radius, standoff distance and jet incident position, covering 3 working conditions in total. Detailed experimental parameters are listed in Table 1. Damage degrees of tanks are analyzed by observing damage range of outer carbon fiber layers, outer perforation diameter, inner hole diameter of aluminum liners, interlayer delamination degree and recording hole sizes.

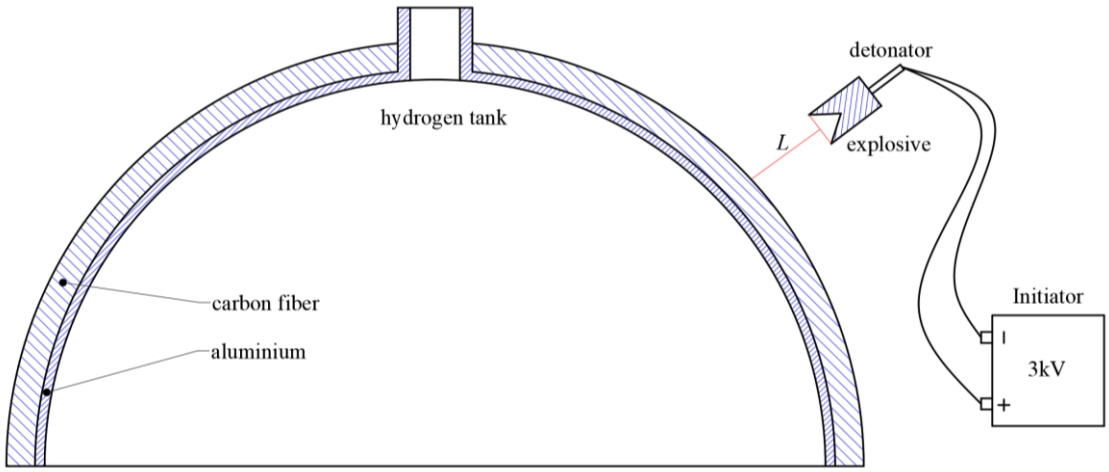

Figure 1. Layout diagram of metal jet penetration experiment on hydrogen storage tank

Table 1. Working condition parameters of shaped charge tests

Working Condition No.	Charge Mass/[g]	Charge Radius/[mm]	Standoff Distance/[mm]
1	55	35	70
2	180	56.5	100
3	180	56.5	100

2.4. Experimental Penetration Results of Tank Vessels

2.4.1. Results of Working Condition 1.

The detonation point position is shown in Figure 2, and experimental results are displayed in Figure 3. The shaped jet generated by 55 g charge can fully penetrate both layers of the tank, proving that energy dissipation of the two tank layers against jet kinetic energy is limited. As shown in Figure 3(a), only a local circular perforation forms on the outer carbon fiber composite layer, with slight fiber fracture around the hole and no large-scale delamination or peeling. Figure 3(b) shows a regular nearly circular hole with smooth edges on the aluminum liner, with an aperture of approximately 10 mm. No typical penetration features of metal targets such as obvious metal flanging, plastic accumulation or shear extrusion rings are observed on the hole wall.

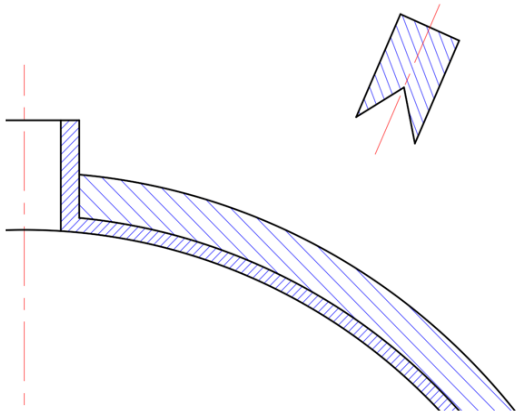

Figure 2. Detonation point position of Working Condition 1



(a) Outer surface (b) Liner surface

Figure 3. Inner and outer wall damage morphologies of tank in Working Condition 1

2.4.2. Results of Working Condition 2.

The detonation point of Working Condition 2 is consistent with Condition 1, and experimental results are shown in Figure 4. Increasing charge mass significantly raises the energy of shaped jet. As seen in Figure 4(a), large-scale delamination, fiber peeling and matrix crushing occur on the outer carbon fiber composite layer, with an obvious failure zone around the perforation. Figure 4(b) demonstrates a remarkable enlargement of opening size on the aluminum liner: the incident hole aperture on the

outer side is about 20 mm, expanding gradually along the penetration direction, and the exit hole reaches approximately 50 mm. The variation law of aperture agrees well with subsequent finite element simulation results.

In addition, the boundary of inner tank holes remains smooth, indicating that the jet retains high residual penetration capacity after passing through the carbon fiber layer and directly impacts the aluminum liner. Overall, the overall blocking capacity of this composite tank against shaped jets is significantly lower than homogeneous metal targets with equal thickness.



(a) Outer surface (b) Liner surface

Figure 4. Inner and outer wall damage morphologies of tank under side-wall incidence with 180g charge

2.4.3. Results of Working Condition 3.

The detonation point position is presented in Figure 5, and experimental results are shown in Figure 6. After changing the jet incident orientation, the shaped jet not only penetrates the side wall of the tank but also perforates the opposite tank wall, forming double-sided through-holes throughout the tank interior and exterior. Observed from the jet incident end (Figure 6(a)), the carbon fiber winding layer develops large-scale cracking and shedding along fiber directions. Figure 6(b) illustrates that damage morphology of the aluminum liner at the incident end is basically consistent with Working Condition 2. Observed from the jet exit end (Figure 6(c)), damage characteristics of the aluminum liner differ greatly from the incident end: besides the main perforation, multiple tiny dot-shaped holes distribute around the main hole, some of which do not fully penetrate the liner. It is speculated that these auxiliary holes are induced by fragments generated at the incident end scattering inside the tank and striking the liner. As shown in Figure 6(d), the shaped jet can penetrate the opposite tank wall from inside the vessel.

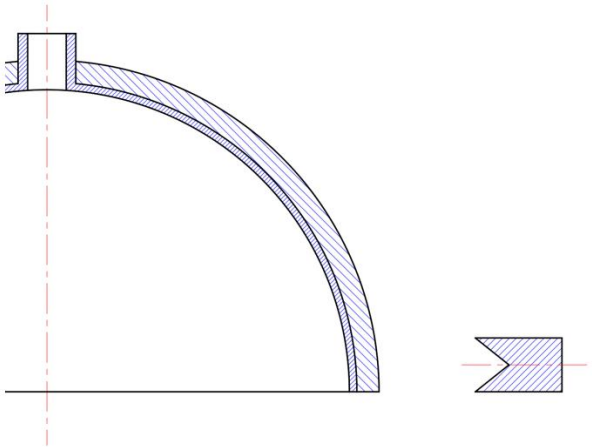

Figure 5. Detonation point position of Working Condition 3



(a) Outer surface at jet incident end

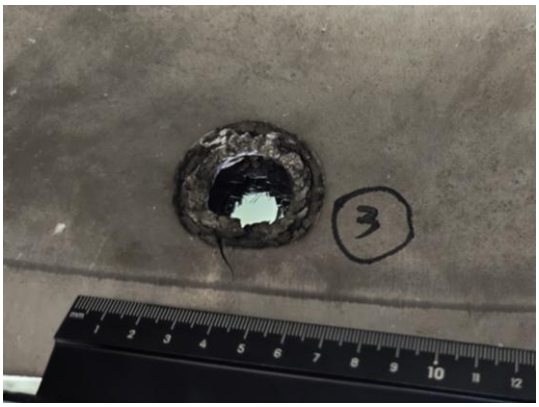

(b) Liner surface at jet incident end



(c) Outer surface at jet exit end



(d) Liner surface at jet exit end

Figure 6. Inner and outer wall damage morphologies of tank in Working Condition 3

3. Simulation Research on Shaped Charge Jet Penetration

3.1. Theoretical Analysis Model of Shaped Jet Penetration

Based on Birkhoff's steady-state fluid theory and PER unsteady correction theory, an analytical calculation model adapted to TNT charges and copper alloy liner systems is constructed. Taylor projection angle correction is applied to micro-element collapse velocities of liners to quantitatively solve jet head velocity, effective flight length and critical fracture duration under different charge working conditions. Combined with radial hole-expansion theory, two failure mechanisms (plastic shear failure of aluminum alloy and brittle fracture failure of carbon fiber) are distinguished, and a prediction formula for opening sizes of double-layer carbon fiber-aluminum tank walls is established, providing theoretical boundaries and result verification criteria for Autodyn finite element simulation. Material parameters related to high-speed stretching of copper liners and energy release of TNT detonation are determined. By comparing energy attenuation calculation systems of shaped jets on homogeneous thick metal targets, the internal mechanical mechanism of weak blocking efficiency of thin-walled carbon fiber-aluminum composite tanks against hypervelocity shaped jets is explained from theoretical perspective.

3.2. Full-process Numerical Simulation Analysis

3.2.1. Construction of Finite Element Simulation Model.

Two-dimensional symmetric models of φ35 and φ56 shaped charges are built in finite element simulation software, with TNT as explosive and copper alloy as liner. The tank body is simplified as flat target plates in finite element models (Figure 7). The computational domain adopts multi-algorithm partition processing: Euler multi-material meshes are uniformly adopted for TNT explosives, air medium and copper alloy liners to adapt to detonation propagation and large deformation stretching of jets; Lagrange meshes are applied to aluminum liners and carbon fiber

winding layers to accurately capture local failure behaviors such as structural delamination and material tearing. The ALE fluid-structure coupling algorithm realizes bidirectional transmission of momentum and energy between Euler fluid domains and Lagrange solid domains, effectively avoiding mesh distortion and distortion under hypervelocity impact conditions.

Constitutive models and state equations are selected according to experimental medium characteristics: the classic JWL detonation state equation is adopted for TNT explosives; the Johnson-Cook plastic constitutive model is used for oxygen-free copper liners and 6061 aluminum alloy liners; the JH-2 brittle damage model coupled with Hashin delamination failure criterion is adopted for carbon fiber composites to fully reproduce fiber splitting, matrix crushing and interlayer peeling damage observed in experiments. Non-reflective transmission boundaries are set on model outer boundaries to eliminate interference from shock wave boundary reflection. Local mesh refinement is implemented in jet formation regions and tank impact contact regions to balance calculation accuracy and solution efficiency.

To clarify the influence law of carbon fiber winding layers on evolution of penetration damage, three simulation cases are calculated for jet penetration: pure aluminum alloy target plate, carbon fiber bonded aluminum alloy target plate, and carbon fiber separated aluminum alloy target plate. Standoff distance parameters remain consistent with experiments.

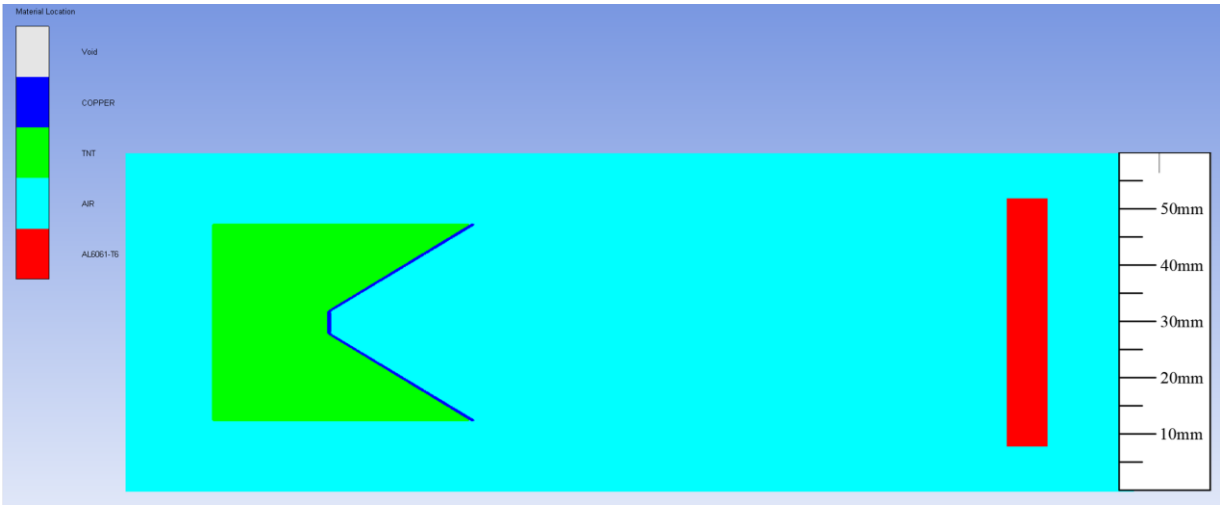

Figure 7. Establishment of finite element model

3.2.2. Analysis of Simulation Results.

Simulation results are shown in Figure 8. For cases with single-layer aluminum liner only, high-speed copper jets penetrate target plates via metal plastic shear action, and plastic deformation of aluminum alloy is limited to local contact regions with narrow distribution of failed elements. The hole radius formed by φ35 shaped charge on aluminum plates is approximately 5 mm, with incident jet velocity of 4701 m/s; the hole radius of φ56 shaped charge reaches about 15 mm, with incident jet velocity of 4392 m/s.

As shown in Figure 9, the perforation diameter on aluminum alloy plates under φ35 shaped charge with bonded carbon fiber is 10 mm, and the jet velocity before reaching aluminum plates is 4230 m/s. Compared with simulation results of pure aluminum targets, the perforation diameter increases with more burrs at jet exit edges. For φ56 shaped charge, the perforation diameter equals that of pure aluminum targets, while the jet velocity before aluminum plates drops to 3068 m/s with distinct hole morphology differences: holes on pure aluminum targets expand gradually into horn shapes, whereas holes under bonded carbon fiber present spindle shapes.

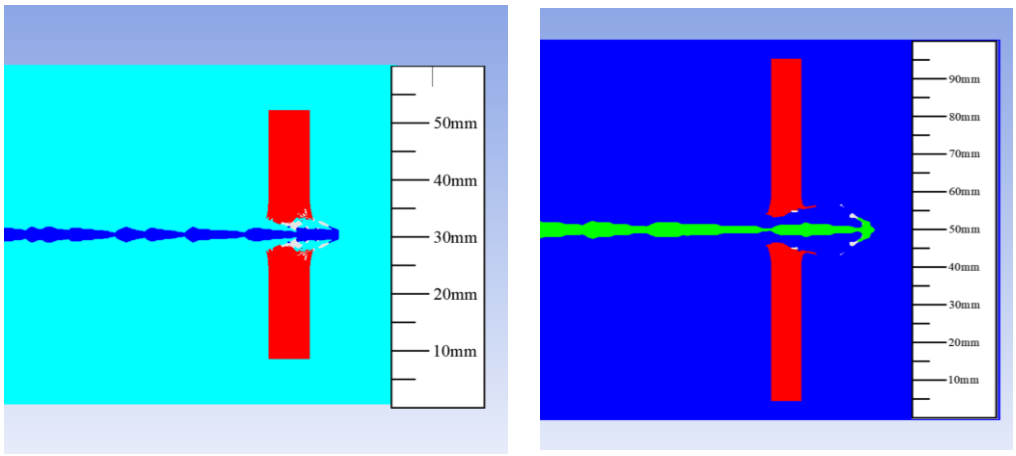

(a) φ35 shaped charge (b) φ56 shaped charge

Figure 8. Penetration effect of metal jet on pure aluminum alloy target plates

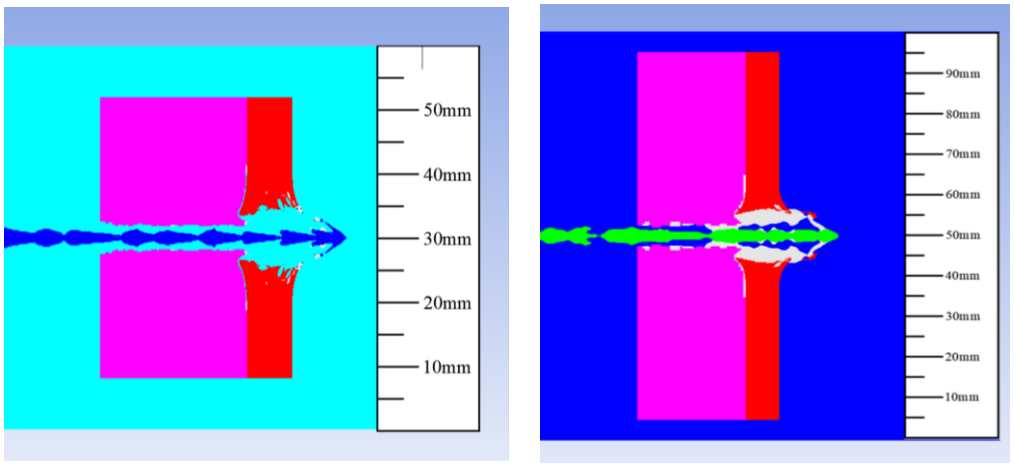

(a) φ35 shaped charge (b) φ56 shaped charge

Figure 9. Penetration effect of jet on carbon fiber bonded aluminum alloy target plates

For double-layer composite targets consisting of carbon fiber and aluminum alloy, the outer carbon fiber layer suffers large-scale brittle failure instantly upon contact with high-speed jets. Without plastic buffering for energy dissipation, massive elements are directly deleted, presenting extensive fiber peeling and matrix crushing. Impact loads are completely transmitted to the rear aluminum liner structure, and the liner develops more obvious tearing and hole-expansion behavior under instantaneous impact loads. To compare penetration effects on aluminum targets without composite target coupling effect, additional simulations are conducted with carbon fiber layers separated from aluminum alloy plates by a certain distance.

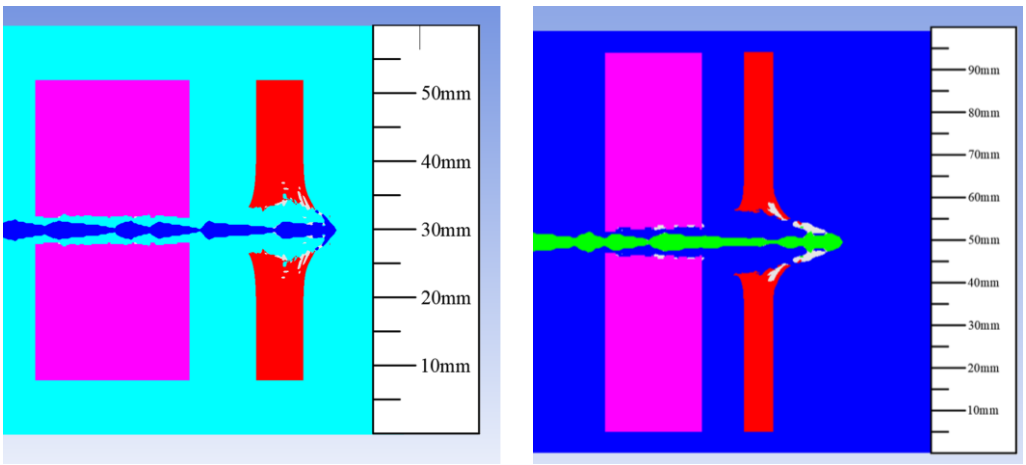

(a) φ35 shaped charge (b) φ56 shaped charge

Figure 10. Penetration effect of jet on separated carbon fiber-aluminum alloy target plates

As shown in Figure 10, after eliminating composite target coupling effect, the perforation aperture of φ35 shaped charge on aluminum plates decreases compared with carbon fiber bonded targets, and hole morphology is closer to pure aluminum targets. Similarly, the perforation aperture of φ56 shaped charge also reduces under separated carbon fiber conditions. In summary, the enlargement of perforation diameter on aluminum liners under bonded carbon fiber conditions originates from the coupling effect of jet velocity attenuation and composite target interaction.

4. Conclusions

In this paper, full-scale tank penetration experiments, theoretical analysis and ALE fluid-structure coupling numerical simulations are performed to study the penetration behaviors of carbon-fiber-aluminum composite hydrogen storage tanks subjected to shaped-charge jet impact. Experimental results demonstrate that shaped-charge jets with different charge masses can fully penetrate the tank structure. The outer carbon-fiber layer undergoes typical brittle failures such as fiber splitting, matrix crushing and interlayer delamination. The inner aluminum liner exhibits limited plastic energy-absorbing capacity, and the overall structure presents a weak blocking effect against high-speed shaped-charge jets. After passing through the carbon-fiber layer, the jet velocity decreases by 500–1300 m/s. The coupling effect between the carbon-fiber layer and aluminum liner significantly enlarges the penetration aperture on the liner. Comparative simulation results verify that such composite-target coupling effect is the dominant cause for aperture enlargement of the liner. This work reveals the energy dissipation law of thin-walled carbon-fiber-aluminum composite structures under hyper-velocity shaped-charge jet loading, and provides experimental basis and theoretical reference for the anti-penetration protection design of high-pressure hydrogen storage tanks.

References

[1] DAI Jingfu, LI Jianzhuo, MENG Xiangyu, et al. Research Progress and Application Status of Carbon Fiber Composites Hydrogen Storage Tanks [J]. Synthetic Fiber in China, 2025, 54(12): 56-61.

[2] Zhang Xuepeng, Xu Can, Wang Yizhen, et al. Research on the penetration of shielding charge by shaped-charge under dynamic conditions [J]. Journal of Ordnance Equipment Engineering, 2026, 47(3): 33-40,75

[3] Birkhoff G, MacDougall D P, Pugh E M, et al. Explosives with lined cavities [J]. Journal of Applied Physics, 1948, 19(6): 563-582.

[4] Pugh E M, Eichelberger R J, Rostoker N. Theory of jet formation by charges with lined conical cavities [J]. Journal of Applied Physics, 1952, 23(5): 532-536.

[5] CAI Xuanming, PAN Chenglong, GUO Anxiao, et al. Anti-penetration characteristics and response mechanism of carbon fiber reinforced plastic laminated structures under high-impact loading [J]. Journal of Vibration and Shock, 2024, 43(12): 88-96, 165. DOI:10.13465/j.cnki.jvs.2024.12.011.

[6] HE Chenglong, YANG Kexu, LIU Yaqing, et al. Effect of thickness of carbon fiber backplane on penetration resistance of aluminum composite plate [J]. Acta Materiae Compositae Sinica, 2025, 42(6): 3122-3134.

[7] FANG Yizhou, ZHANG Xianfeng, XIONG Wei, et al. Characteristics of After-effect Parameters of Shaped Charge Jet Penetrating Finite Thickness Steel Target [J]. Chinese Journal of Energetic Materials (Hanneng Cailiao), 2024, 32(9): 899-910

[8] XUE Dongyu, WU Cheng, AN Fengjiang. Study on the penetration effect of liner's penetrators with heavy metal materials to water-steal plate medium [J]. Journal of Ordnance Equipment Engineering, 2024, 45(6): 58 - 65,276.

[9] WU Qiaoguo, CAO Changlong, ZU Lei, et al. Effect of winding layer crack on burst performance of carbon fiber composite cylinder with aluminum liner [J]. Acta Materiae Compositae Sinica, 2025, 42(9): 5378-5391.

[10] KANG Kai, ZHU Lei, WU Qiaoguo, et al. Research on burst strength and fatigue performance of carbon fiber wound composite cylinder with aluminum alloy liner [J]. SCI ENG COMPOS MATER, 2022(8): 35-43. DOI:10.19936/j.cnki.2096-8000.20220828.005.

[11] CHEN Xingwang, LIU Fu, WANG Mian, et al. Formation characteristics and penetration performance of shaped charge jet [J]. Journal of Ordnance Equipment Engineering, 2024, 45(S1): 237-244.

[12] Jiang Lei, Cheng Hua, Sun Guanghui, Zhang Junkun.Equivalent Relationship Between Ceramic and Homogeneous Steel Under Jet Penetration [J]. Ordnance Industry Automation, 2025, 44(12): 87-91, 102. DOI:10.7690/bgzdh.2025.12.018.

[13] ZHAO Zheng, TAO Gang, DU Changxing. Application Research on JWL Equation of State of Detonation Products [J]. Chinese Journal of High Pressure Physics, 2009, 23(4): 277-282. DOI:10.3969/j.issn.1000-5773.2009.04.007.

[14] LIU Jun, YANG Liming, XIE Shugang, et al. Dynamic Tensile Properties and Constitutive Model of 6061 Aluminum Alloy [J]. Materials for Mechanical Engineering, 2017, 41(3): 49-53. DOI:10.11973/jxgccl201703010.

[15] GUO Anxiao, GAO Jingwu, CAI Xuanming, et al. Research on the anti-penetration characteristics of composite laminates under impact of flat-nosed projectile [J]. Journal of North University of China(Natural Science Edition), 2025, 46(1): 27-34.